AIH/SBN 1981 Editorial Index

INDEX TO FEATURE ARTICLES IN AUTOMATION IN HOUSING/SYSTEMS BUILDING NEWS From January 1981 Edition Through December 1981 Edition.

KEY: Roman numerals in parentheses in front of each article indicate the type of company covered in the article as follows: (I) - Production Builder; (II) - Panelized Home Manufacturer; (III) - Mobile Home Manufacturer; (IV) - Modular Home Manufacturer; and (V) - Component Manufacturer. Some firms are in more than one business, but only main designations are used for the specific feature being covered.

NOTE: Back issues and/or reprints of articles from past editions are sometimes available from AIH/SBN. However, if articles you are requesting are more than six months old, your best bet for copies is to go directly to the AIH/SBN microfilm service which sells copies at nominal cost. The address is: University Microfilms. 300 North Zeeb Road, Ann Arbor, MI 48106. Phone: 313-761-4700.

JAN. 1981 (VOL. 18, NO. 1)

AMERICA'S INDUSTRIALIZED HOUSING MACHINE

Schematic Drawing of the Output of Each Segment of the Manufactured Housing Industry for Calendar Year 1980. Page 1.

(IV) "Incremental Building" with Modular Units Is Remic Industries Success Formula.

By Don Carlson. Remic Industries, Inc. Modular/Mobile Manufacturer, San Bernardino, CA. Page 8.

"Housing of the Future" Draws Record 100,000 to WMHI Dodger Stadium Show.

Full-Color Photo Report on Some of the More than 60 Modular/Mobile Homes Displayed in a Community Setting at the WMHI Expo. Page 16.

STATE OF THE INDUSTRY: Housing Drops 24% In 1980; Factory Builders Project Increases for the First Quarter of '81.

AIH/SBN's Exclusive Report based on National Telephone Interviews of Each Type of Housing Producer. By George Rosenbaum, President, Leo J. Shapiro & Associates, Marketing Research Specialists, Chicago, IL. Page 18.

1981 AIH/SBN BUYERS GUIDE

Here Is the Housing Industry's Most Complete and Detailed Listing of Products, Machines and Services And More than 600 Companies which Supply Them. Keep this Edition Handy for Your Source for Information And Purchasing.

Alphabetical Company Listings. Page 22.
Alphabetical Generic Listings. Page 41.

FEB. 1981. (VOL. 18, NO. 2)

How to Avoid Fires In New Construction

By Branley Allan Branson, Eastern Kentucky University, Richmond, KY. Page 1.

(II) With Wickes Components: D-I-Y, A Housing Answer.

By Jan Noble Jr., The Wickes Corporation, Saginaw, MI and Mishawaka, IN. Page 1.

(II) Two Solar Energy Methods Heat New NELHI Log Home

New England Log Homes, Inc., (NELHI). Hamden, CT. Page 1.

(II) Domes May Double in 1981.

Report on the National Dome Association, Evanston, IL. Page 65.

AIH/SBN Seventeeth Anniversary Reports From 23 Companies Who help Make Manufactured Housing Go!

Alpine Engineered Products, Inc. . . 48
Automated Building Components . 14
Boise Cascade Corp. 13
Carlson Systems Engineering 42
Champion Building Products 66
Duo-Fast Corp. 38
Georgia-Pacific Corp. 8
Green Tree Acceptance, Inc. 12
Heritage International, Inc. 56
Hydro-Air Engineering, Inc. 24
Idaco Engineered Products 58
Kim-Stack Sales Corp. 22
Linkwood Construction Systems . . 52
Lumbermate Co. 28
Masonite Corp. (Regional) 34-A
Metriguard 54
On-Line Data, Inc. 36
Owens-Corning Fiberglas Co. 30
Ruvo Automation Corp. 40
Simpson Timber Co. 32
Speed Cut, Inc. 16
Weather Shield Mfg., Inc. 46
Winton Sales Co. 26

MARCH 1981 (VOL. 18, NO. 3)

(II) RASTRA: New Light-Weight Concrete Wall Panel System

Power Industrieplanung, Switzerland/Austria. Page 1.

NAHB Expo Product Showcase

Full-Color Photo Report on Machines And Products at January NAHB Show Page 12 & 14.

Stick Builders Advised: Switch to Factory Housing for More Bnefits, Profits

Four Experts on NAHB Panel Tell Multiple Benefits for Stick Builders. Page 1.

MHI at Louisville Shows Its Homes

Full-Color Photo Report on Multi-Section Homes at January MHI Louisville Show. Page 18 & 22.

(III) Selling Mobiles With Land Is Industry's Hottest Topic

Full Report on The MHI Land/Finance Seminar at MHI Show. Page 23.

(IV) Component Manufacturer Survey: 95% Make Roof Trusses, 52% Floor Trusses, 25% Wall Panels, 24% Doors.

Exclusive AIH/SBN Report on U.S. and Canadian Component Manufacturers. Page 1.

(V) Top Component Manufacturer. Page 26.

(V) Directory of Component Manufacturers.

State-by-State Alphabetical Directory of Over 640 Component Manufacturers in the U.S. and Canada With keys to type of components made and company dollar volume size. Page 1.

Most Roofing, Siding, Flooring Is Specified by Home Manufacturers Rather than Dealers, Architects, Consumers

Results of a National Survey for AIH/SBN by Leo J. Shapiro Associates, Inc., Chicago, IL. Page 48.

APRIL 1981 (VOL. 18, NO. 4).

(II) Pacific's HIgh Production Key Is Advance Planning

Pacific Buildings, Inc., Panelized Home Manufacturer of Marks, MS. By Kristal Vannice. Page 1.

(IV) Inspired Designs, Construction Superiority Launch Modular Firm

Sun Built Homes, Modular Home Manufacturer, Div., Cavco Industries, Phoenix, AZ. By Don Carlson. Page 1.

(III) Parkwood Homes Finds Recipe for Success

Parkwood Homes, Inc., Mobile Home Manufacturer, Bristol, IN. By Jan Noble, Sr. Page 1.

The Best Seller Homes of 1980

Dwellings Selected By All Types of Industrialized/Manufactured Housing Companies Which Proved To Be The Best Sellers Last Year. First of Two Reports. Page 28.

More Compact, Energy Conscious Homes Seen in Dow Research

Dow Chemical, U.S.A., Midland, MI Page 32.

(III) Improvements Separate 'Mobiles' From 'Real Alternative Housing'

Glen River Industries, Mobile Home Manufacturer, Centralia, WA. Page 34.

(I) Luxury Home Buyers Say 'Keep It Quiet'

Irvin A. Bleitz Organization, Production Builder, Evanston, IL. Page 36.

NAHM Unveils Certification/Inspection Program for Industrialized Housing

A New Nationwide Plan to Create Code Acceptance for Industrialized Housing By States and Local Communities. Page 42.

MAY 1981 (VOL. 18, NO. 5)

(II) With Wood Foundation Base Structure: Everstrong Marketing Scores With Earth Sheltered Home Breakthrough

Everstrong Marketing, Inc., Redwood Falls, MN. By Don Carlson. Page 1.

AIH/SBN 1981 Editorial Index

INDEX TO FEATURE ARTICLES IN AUTOMATION IN HOUSING/SYSTEMS BUILDING NEWS From January 1981 Edition Through December 1981 Edition.

KEY: Roman numerals in parentheses in front of each article indicate the type of company covered in the article as follows: (I) - Production Builder; (II) - Panelized Home Manufacturer; (III) - Mobile Home Manufacturer; (IV) - Modular Home Manufacturer; and (V) - Component Manufacturer. Some firms are in more than one business, but only main designations are used for the specific feature being covered.

NOTE: Back issues and/or reprints of articles from past editions are sometimes available from AIH/SBN. However, if articles you are requesting are more than six months old, your best bet for copies is to go directly to the AIH/SBN microfilm service which sells copies at nominal cost. The address is: University Microfilms. 300 North Zeeb Road, Ann Arbor, MI 48106. Phone: 313-761-4700.

JAN. 1981 (VOL. 18, NO. 1)

AMERICA'S INDUSTRIALIZED HOUSING MACHINE

Schematic Drawing of the Output of Each Segment of the Manufactured Housing Industry for Calendar Year 1980. Page 1.

(IV) "Incremental Building" with Modular Units Is Remic Industries Success Formula.

By Don Carlson. Remic Industries, Inc. Modular/Mobile Manufacturer, San Bernardino, CA. Page 8.

"Housing of the Future" Draws Record 100,000 to WMHI Dodger Stadium Show.

Full-Color Photo Report on Some of the More than 60 Modular/Mobile Homes Displayed in a Community Setting at the WMHI Expo. Page 16.

STATE OF THE INDUSTRY: Housing Drops 24% In 1980; Factory Builders Project Increases for the First Quarter of '81.

AIH/SBN's Exclusive Report based on National Telephone Interviews of Each Type of Housing Producer. By George Rosenbaum, President, Leo J. Shapiro & Associates, Marketing Research Specialists, Chicago, IL. Page 18.

1981 AIH/SBN BUYERS GUIDE

Here Is the Housing Industry's Most Complete and Detailed Listing of Products, Machines and Services And More than 600 Companies which Supply Them. Keep this Edition Handy for Your Source for Information And Purchasing.

Alphabetical Company Listings. Page 22.
Alphabetical Generic Listings. Page 41.

FEB. 1981. (VOL. 18, NO. 2)

How to Avoid Fires In New Construction

By Branley Allan Branson, Eastern Kentucky University, Richmond, KY. Page 1.

(II) With Wickes Components: D-I-Y, A Housing Answer.

By Jan Noble Jr., The Wickes Corporation, Saginaw, MI and Mishawaka, IN. Page 1.

(II) Two Solar Energy Methods Heat New NELHI Log Home

New England Log Homes, Inc., (NELHI). Hamden, CT. Page 1.

(II) Domes May Double in 1981.

Report on the National Dome Association, Evanston, IL. Page 65.

AIH/SBN Seventeeth Anniversary Reports From 23 Companies Who help Make Manufactured Housing Go!

Alpine Engineered Products, Inc. . . 48
Automated Building Components . 14
Boise Cascade Corp. 13
Carlson Systems Engineering 42
Champion Building Products 66
Duo-Fast Corp. 38
Georgia-Pacific Corp. 8
Green Tree Acceptance, Inc. 12
Heritage International, Inc. 56
Hydro-Air Engineering, Inc. 24
Idaco Engineered Products 58
Kim-Stack Sales Corp. 22
Linkwood Construction Systems . . 52
Lumbermate Co. 28
Masonite Corp. (Regional) 34-A
Metriguard 54
On-Line Data, Inc. 36
Owens-Corning Fiberglas Co. 30
Ruvo Automation Corp. 40
Simpson Timber Co. 32
Speed Cut, Inc. 16
Weather Shield Mfg., Inc. 46
Winton Sales Co. 26

MARCH 1981 (VOL. 18, NO. 3)

(II) RASTRA: New Light-Weight Concrete Wall Panel System

Power Industrieplanung, Switzerland/Austria. Page 1.

NAHB Expo Product Showcase

Full-Color Photo Report on Machines And Products at January NAHB Show Page 12 & 14.

Stick Builders Advised: Switch to Factory Housing for More Bnefits, Profits

Four Experts on NAHB Panel Tell Multiple Benefits for Stick Builders. Page 1.

MHI at Louisville Shows Its Homes

Full-Color Photo Report on Multi-Section Homes at January MHI Louisville Show. Page 18 & 22.

(III) Selling Mobiles With Land Is Industry's Hottest Topic

Full Report on The MHI Land/Finance Seminar at MHI Show. Page 23.

(IV) Component Manufacturer Survey: 95% Make Roof Trusses, 52% Floor Trusses, 25% Wall Panels, 24% Doors.

Exclusive AIH/SBN Report on U.S. and Canadian Component Manufacturers. Page 1.

(V) Top Component Manufacturer. Page 26.

(V) Directory of Component Manufacturers.

State-by-State Alphabetical Directory of Over 640 Component Manufacturers in the U.S. and Canada With keys to type of components made and company dollar volume size. Page 1.

Most Roofing, Siding, Flooring Is Specified by Home Manufacturers Rather than Dealers, Architects, Consumers

Results of a National Survey for AIH/SBN by Leo J. Shapiro Associates, Inc., Chicago, IL. Page 48.

APRIL 1981 (VOL. 18, NO. 4).

(II) Pacific's HIgh Production Key Is Advance Planning

Pacific Buildings, Inc., Panelized Home Manufacturer of Marks, MS. By Kristal Vannice. Page 1.

(IV) Inspired Designs, Construction Superiority Launch Modular Firm

Sun Built Homes, Modular Home Manufacturer, Div., Cavco Industries, Phoenix, AZ. By Don Carlson. Page 1.

(III) Parkwood Homes Finds Recipe for Success

Parkwood Homes, Inc., Mobile Home Manufacturer, Bristol, IN. By Jan Noble, Sr. Page 1.

The Best Seller Homes of 1980

Dwellings Selected By All Types of Industrialized/Manufactured Housing Companies Which Proved To Be The Best Sellers Last Year. First of Two Reports. Page 28.

More Compact, Energy Conscious Homes Seen in Dow Research

Dow Chemical, U.S.A., Midland, MI Page 32.

(III) Improvements Separate 'Mobiles' From 'Real Alternative Housing'

Glen River Industries, Mobile Home Manufacturer, Centralia, WA. Page 34.

(I) Luxury Home Buyers Say 'Keep It Quiet'

Irvin A. Bleitz Organization, Production Builder, Evanston, IL. Page 36.

NAHM Unveils Certification/Inspection Program for Industrialized Housing

A New Nationwide Plan to Create Code Acceptance for Industrialized Housing By States and Local Communities. Page 42.

MAY 1981 (VOL. 18, NO. 5)

(II) With Wood Foundation Base Structure: Everstrong Marketing Scores With Earth Sheltered Home Breakthrough

Everstrong Marketing, Inc., Redwood Falls, MN. By Don Carlson. Page 1.

(V) Seth Lumber Co. Line Ranges From One Component to a Complete Home

Seth Lumber Co. and SECO Components, Lincolnton, NC. By Jan Noble, Sr. Page 1.

(III) In Manufactured Housing: How to Get the Right Color

Color Marketing Group, Washington, DC. By Sherry Ellman. Page 1.

(II) Designed by a Panelized Home Manufacturer: New Pre-Built Stair System Installs in One Hour; One Size Fits All

Stairways Div., Visador Co., Lancaster, TX. Page 22.

(V) Saves A Couple of Engineers: 'Auto-Truss' Serves as Management Tool at Wood Components, Inc.

Wood Components of South Florida, Inc., West Palm Beach, FL. Page 28.

The Best Seller Homes of 1980

Dwellings Selected by All Types of Industrialized/Manufactured Housing Companies which Proved To Be the Best Sellers Last Year. Page 30, 31, 34.

(III) Almost $43 Million in Sales: Vertical Integration Is the Key For Oakwood Mobile Homes Success

Oakwood Homes Corp., Greensboro, NC. By Jan Noble, Sr. Page 32.

Wood Foundation Institute Meeting Set for June 25-26. Page 14.

JUNE 1981 (VOL. 18, NO. 6)

Here's How to Stop Thieves and Vandals at Your Construction Sites

By Joe Monstwillo, Ex-Security Officer, Tinley Park, IL. Page 1.

(II) New Timber Skeleton System

Post and Beam System Developed by Streif Company, West Germany. Page 1.

(V) Reliability, Training Give Denver Truss Fast Growth

By Nick Vella. Denver Truss & Component Manufacturing, Inc., Denver, CO. Page 1.

Housing Grows in First Quarter; Mobiles Spurt

Builder:' Predictions Mixed in Mid-Year Housing Status Report by Leo J. Shapiro & Associates, Inc. Page 22.

(I) Buyer Seminars, PR, Customization, Branch Sales Offices, Updated Machines Bring 5-Fold Sales Growth

By Ellen Alberding. Production Builder Called Modular Custom Homes, Newcastle, CA. Page 24.

NAHB Product Show Case

Additional 4-Color Reports on New Products Introduced at the NAHB Expo. Page 28.

(III) Canadian Mobile/Modular Firm Boosts Sales With Vinyl Siding

Pyramid Homes Div., Beatrice International (Canada) Ltd., Cobourg, Ontario. Page 32.

(I) NAHB 'Approach 80' Subdivision Bunches Cost-busting Methods

Color Report on NAHB Research Project in Las Vegas, NV. Page 33.

JULY 1981 (VOL. 18, NO. 7)

(I) 330 Home Sales in Five Years: Big Profit Advantages in Automation For Richlar, L.A. Production Builder

The Richlar Partnership, West Los Angeles, CA. By Don Carlson. Page 1.

(II) Reynolds 'Containerized' Aluminum Homes Serve Tough Overseas Markets

Reynolds Metals Company's Vega System, Richmond, VA. Page 1.

(V) Crissey Fowler Bets on Tomorrow With New Truss Manufacturing Plant

Crissy Fowler Lumber Co., Colorado Springs, CO. By Jan Noble, Sr. Page 1.

(V) MOE Is Explained: Here's How Grading Differs For Visual and MSR Lumber

By James D. Logan, President, Metriguard, Inc., Pullman, WA. Page 22.

(V) The Good Sense of Using MSR To Avoid Liability Problems

Continued on Page 36

MAKE WALL FRAMING ECONOMICAL WITH TRIAD'S ECON-O-FRAMER

TESTED
PROVEN

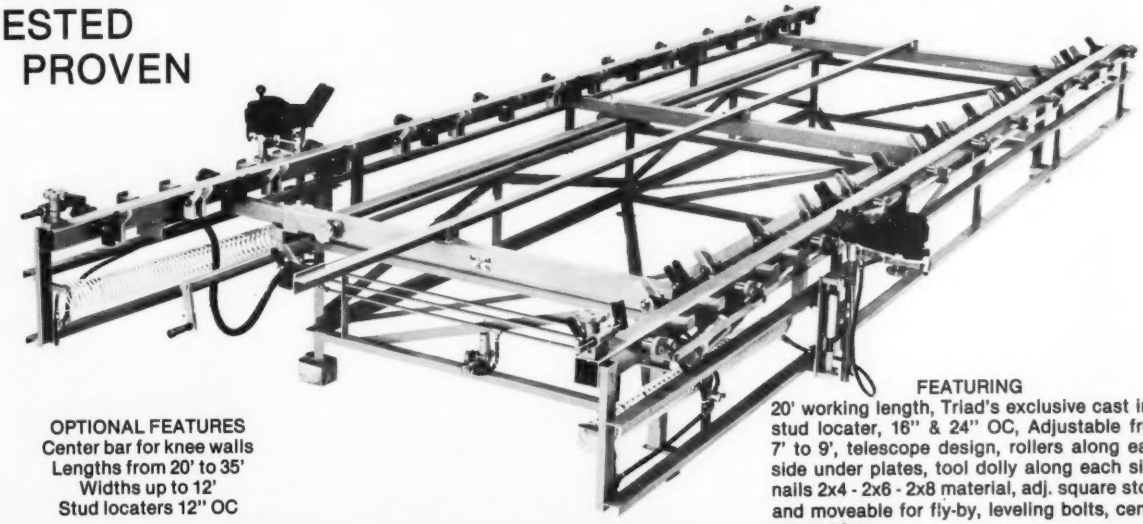

OPTIONAL FEATURES
Center bar for knee walls
Lengths from 20' to 35'
Widths up to 12'
Stud locaters 12" OC

FEATURING
20' working length, Triad's exclusive cast iron stud locater, 16" & 24" OC, Adjustable from 7' to 9', telescope design, rollers along each side under plates, tool dolly along each side, nails 2x4 - 2x6 - 2x8 material, adj. square stops and moveable for fly-by, leveling bolts, center support bar.

TRIAD

MERRICK MACHINE CO.
Box 130 • Alda, Nebraska 68810 • Phone (308) 384-1780

Quiet Quality

Circle Number 11 on Reader Service Card

AUTOMATION IN HOUSING
& SYSTEMS BUILDING NEWS

EDITORIAL REVIEW BOARD

BUILDING SYSTEMS AND REGULATIONS
Tom Arnold,
President,
T.R. Arnold & Associates, Inc.
Elkhart, IN

TRANSPORTATION
Charles A. Barns,
President,
Barns Lbr. & Mfg. Co.
Dallas, TX

M.H.I. AFFAIRS
Walter Benning,
President
Manufactured Housing Institute
Arlington, VA

MANUFACTURING
Carl T. Hall,
Vice President
Manufacturing,
Ryan Homes, Inc.
Pittsburgh, PA

N.A.H.M. AFFAIRS
John Kupferer,
Vice President,
National Association of
Home Manufacturers
Falls Church, VA

ROOFING
Robert A. LaCosse,
Director Technical Services,
National Roofing
Contractors Association
Chicago, IL

MOBILE HOMES
Ken MacIntosh,
Director,
Manufactured Housing,
National Gypsum Co.,
Charlotte, NC

T.P.I. & C.M.C. AFFAIRS
Paul Gomez
Executive Vice President,
Truss Plate Institute
Frederick, MD

PANELIZED HOMES
David R. Price,
President,
National Homes Corp.,
Lafayette, IN

W.M.H.I. AFFAIRS
Howard Snider,
President,
Western Manufactured
Housing Institute,
Anaheim, CA

CODES & ZONING
Ed Starostovic,
President,
PFS Corporation
Madison, WI

EDUCATION
Steven Winter, Professor
Of Architecture, Columbia U.,
Pres. S. Winter Bldg. Systems
Consultants, NY, NY

AIH/SBN Index/
Continued from Page 33

By John E. Meeks, P.E., Consulting Engineer, Ft. Lauderdale, FL. Page 26.

(V) Trusses and Simpson MSR: Made for Each Other

By Hal Carlson, Specialty Marketing Manager, Lumber, Simpson Timber Co., Seattle, WA. Page 28.

(V) Weyerhaeuser's MSR: Window to The Future

By Kay Kahus, Product Sales Manager, Structural Lumber, Weyerhaeuser Co., Tacoma, WA. Page 32.

Indiana Show At Notre Dame August 11-16. Page 34.

(II) Heritage and McSpadden Announce Sales Team-Up. Page 34.

Second Annual BCMC Show At MGM in Reno Set for Nov. 4-6. Page 38.

AUGUST 1981 (VOL. 18, NO. 8)

The Top 100 Home Producers of 1980: Feeling Pinch Between Price and Prime

Here are the Dollar Volume Rankings And Number of Units Built by The Top 100 Home Producing Companies. Page 1.

The Top 25 By Number of Units Produced. Page 10.
Alphabetical Listing of The Top 100. Page 11.

(II) The Ups, Downs and Neat Ideas of George Osborne

A Look at the Life and Times and Ideas of George Osborne, President, Mobile Modules, Inc., Chehalis, WA. By C. Budd Dugan. Page 1.

(III) Quality, Integration, Versatility See Kropf Through 35 Good Years

Kropf Mfg. Co., Goshen, IN, Operated By the "Oldest Continuous Family Management." By Jan Noble, Sr. Page 1.

Wood Foundation Movement Seen as 'Accelerating Train;' New Developments Reported.

Summer Wood Foundation Institute Meeting Hears Predictions of 200,000 Wood Basements Annually. Page 30.

(V) Three-Man Crew Shatters Roof Truss Record by Building 209.3 per Man!

Crew at American Building Components, Monroe, LA Turns out Trusses in 7½ Hours. Page 35.

Set for Chicago September 14-16: Professional Seminars Highlight New National MHI Suppliers Show. Page 38.

SEPT. 1981 (VOL. 18, NO. 9)

(III) California Group Scores "First" With Self-Owned MH Subdivision

Poinsettia Gardens, Ventura, CA. By Don Carlson. Page 1.

Continued on Page 38

AUTOMATION IN HOUSING
& SYSTEMS BUILDING NEWS

SALES OFFICES

AIH/SBN HEADQUARTERS: Don or Lance Carlson, P. O. Box 126, (4465 El Carro Lane), Carpinteria, CA 93013. Phone: 805-684-7659.

CHICAGO OFFICE: Russ Carlson, Associate Publisher, 1115 Eisenhower Court, Vernon Hills, IL 60061. Phone: 312-680-7190.

CHICAGO/MIDWEST: Bob or Ray Davis, Davis & Sons, P. O. Box 595, Davis Building, Crystal Lake, IL 60014. Phone: 815-459-8020.

NEW YORK: Eugene A. Greenberg, E. A. Greenberg Co., 19 Emerson St., Dix Hills, NY 11746. Phone: 516-242-5757.

HOUSTON: Miss Carol Ann Phillips, Roy McDonald Associates, Inc., Suite 210, 6901 Corporate Drive, Houston, TX 77036. Phone: 713-988-5005.

DALLAS: Alan Walker, Roy McDonald Associates, Inc., First Continental Bank Building, Suite 303, 5801 Marvin D. Love Freeway, Dallas, TX 75237. Phone: 214-941-4461.

DENVER: Bud Foster, Roy McDonald Associates, Inc., 14 Inverness Drive East, Building No. 1 Penthouse, Englewood, CO 80112. Phone: 303-771-8181.

SAN FRANCISCO: Ian McDonald, Roy McDonald Associates, Inc., 5801 Christie Ave., Emeryville, CA 94608. Phone: 415-653-2122.

PORTLAND: Frank Eaton, Roy McDonald Associates, Inc., 510 South First St., P. O. Box 696, Hillsboro, OR 97123. Phone: 503-640-2011.

AIH/SBN Index/
Continued from Page 36

Stellar Plans Now Underway For Second Annual BCMC Expo at Reno

November 5-8 Set for Building Component Manufacturers Conference at MGM-Grand Hotel in Reno, NV. Page 1.

(I) New Foundation Trusses Slash Crawl Space Time to Two Hours

Bowen Construction Co., Post Falls, ID. Page 1.

Caradco, Wood Window Manufacturer, Zeros-In on Manufactured Housing

Caradco, Rantoul, IL. By Richard W. Doublass. Page 22.

(I) S&L's TV-Radio Campaign Sells 53 Homes, 72 Improved Lots

Unity Savings, Chicago, IL. Page 26.

Wood Foundation Institute Newsletter. Page 32.

OCTOBER 1981 (VOL. 18, NO. 10)

(V) Littfin 3-Man Crew Sets New World Roof Truss Record: 972 in 7½ Hrs.

Littfin Lumber Co., Howard Lake, MN Establishes Its Third World Record in the AIH/SBN Championship Competition. Page 1.

(III) Premier Architect Craig Wheeler Sees Bright Mobile/Modular Future

Craig Wheeler, Orange, CA. Page 1.

Waferwood: Marching into Plywood, Particlboard Markets in Housing

Louisiana-Pacific Corporation's New Waferwood Plant, Hayward, WI. Page 1.

Plans Being Finalized For Second B.C.M.C. Expo, Reno, NV, November 5-8.

Heavy Industry Attendance Expected for Excellent Seminars, Exhibits. Page 18.

(V) Micro-Computer, Machine Ideas And Farm/Commercial Sales Aid Success

All-Fab Building Components, Ltd., Winnipeg, Canada. Page 20.

(II) Prefabricator for Big Buyers

Olympic Prefabricators, Inc., Seattle, WA. Page 24.

Big Attendance Increases At Indiana IMHA Show

Full-Color Report. Page 28.

(III) Village Green Homes Unveils "K-Car" of the Mobile Home Industry

Village Green Homes, Inc., Etna Green, IN. Page 30.

New WMHI Dodger Stadium Show To Feature $5 Million in Homes

More than 60 Mobile/Modulars to go On Display November 10-22. Page 43.

NOVEMBER 1981 (VOL. 18, NO. 11)

(II) Energy Savings, Striking Appearance Build Solid Sales for Cathedralite

Cathedralite Homes, Capitola, CA Page 1.

(V) Also Competing with Gold Fever: Yukon Truss Plant Survives Arctic, Boom & Bust Economy

Kilrich Industries, Ltd., Whitehorse, Yukon Territory. Page 1.

(V) On-Line Workshop Explores Playing Safe With Trusses

On-Line Data, Inc., Richardson, TX. Page 22.

(II) A Quality-Certified Program: Sixty-Six National Homes Corp. Builders Go for Wood Foundations

National Homes Corp., Lafayette, IN. Page 1.

(I) Sales From Ryland Group's New Texas Plant Reach 400

Ryland Building Systems, Houston, TX Page 30.

(II) Earth Shelter Homes, Warranty Program, New Sales Film Covered at Heritage Meeting

Heritage International, Inc., Salt Lake City, UT. Page 41.

DECEMBER 1981 (VOL. 18, NO. 12)

PROTECT MODULES
IN STORAGE–ENROUTE–ON SITE
AGAINST
SUN • RAIN • SLEET • SNOW
GRIT • GRAVEL • TAR • FUMES
RIPS • TEARS and ABRASION
WITH LONG LASTING
REUSABLE TARPAULINS
made of rugged Shelter-Lite® vinyl-coated DuPont nylon with welded seams and reinforced hems and grommets. Thousands of truck and trailer tarps made of Shelter-Lite are on the road day and night, taking all the punishment that wind and the weathe. can hand out.
FOR FAST SERVICE ON LOW COST CUSTOM-MADE TARPS OF ALL KINDS . . . CALL
DETROIT TARPAULIN COMPANY
371 South Dix Ave., Detroit, Michigan 48217
Phone 313/842-4889

Circle Number 14 on Reader Service Card

CAE CONSTRUCTION AUTOMATION EQUIPMENT ASSOCIATES
Sales Representatives for the Leading Equipment Manufacturers
ROOF & FLOOR TRUSS: Cutting & Assembly
PRE HUNG DOOR: Wood & Metal
WALL FRAMING
SUPPORT EQUIPMENT
CUSTOM & SPECIAL MACHINES
PLANT LAYOUT & PRODUCTION DESIGN
NEW & USED

Northeast & Canada	–Paul Hurd	(207) 882-7232
Mid-Atlantic	–John Porter	(301) 885-5233
Midwest	–Ralph Sebring	(219) 836-4237
Southwest	–Gene Smith	(817) 295-6850
Western U.S. & Canada	–Bud Switzer & Brady Switzer	(213) 377-5792

Circle Number 15 on Reader Service Card

I
D
E
K

MI

(I) Guy R. Odom, Chairman, U.S. Home Corp., Wins 1981 Price-AIH/SBN Housing Award

Head of Nation's First $1 Billion Builder Wins 8th Annual Achievement in Housing Award. Page 1.

Roster of Achievement in Housing Award Winners. Page 9.

(I) Guy R. Odom, U.S. Home, See Big Future for Manufactured Housing

No Worry Seen from Japanese Housing; U.S. Home Seeks Mobile/Modular Mergers. Page 1.

(I) Guy R. Odom: A Personality Profile. Page 11.

(I) U.S. Home Corp.: Well Planned Blueprints for Sales Success

Here's Some of the Ideas and Methods The Company Uses to Insure Management And Sales Success. Page 1.

(II) Unique Extruded Aluminum Studs Create Low-Cost Housing System

Manufactured and Delivered Homes Corp., Hacienda Heights, CA. Page 16.

PRE-VIEWS: MHI in Louisville, January 11-14; NAHB in Las Vegas, January 22-25

Nation's Two Biggest Housing Expos Page 20.

(II) Stressed-Skin Panels Help Revive Post and Beam Home Architecture

Atlas Industries, Inc., Ayer, MA. By Gerald K. Nelson. Page 24.

(II) Lancer's Energy-Efficient Homes; 'They Sell Themselves'

Lancer Homes, Childress, TX. Page 28.

AIH/SBN 1981 Editorial Index

Complete Listing of Feature Articles, Categorized by Type of Company, which Appeared in AIH/SBN in Calendar Year 1981. Page 30.

Guy Odom Wins/Continued from Page 8

more than a 1% origination fee in connection with obtaining a loan. Recipients of the new mortgage loans should be limited to individuals whose median income does not exceed 200% of the local median income.

More Housing Funds

Guy further recommended that Congress consider requiring that a percentage of individual retirement accounts, pension funds and other company and government sponsored retirement plans be invested in home mortgages.

For the longer range future of American housing, Guy Odom believes there will be a major boom in housing in this decade as soon as interest rates stabilize. While at present U.S. Home is fighting to retain their properties, he believes the sound structure of the company and its land holdings will give it an important 'leg-up' as soon as the expansive growth begins.

Guy Odom cautions, however, "When the boom comes we are going to find out that we simply no longer have the capacity in the nation to produce the 2.2 million homes we need each year without producing a lot of junk; also, our national vendors of building materials are capable of producing materials for only about 1.7 million units annually before they start running into shortages and allocations. In short, the longer we endure this high-interest-rate sickness, the longer and more difficult will be our recovery period."

U.S. Home Corporate Officers include: Guy R. Odom, chairman of the board and chief executive officer; George H. Matters, president and chief operating officer; Isaac Heimbinder, senior vice president, finance and secretary; Tim W. Humphrey, senior vice president, audit; L. Rita Osfield, senior vice president, management development; Larry E. Shultz, senior vice president, operations; Robert J. Strudler, senior vice president, acquisitions; John A. Johnson, vice president, operations; Larry D. Kelly, vice president, operations; Thomas A. Napoli, vice president, treasurer; Henry M. Otero, vice president, accounting; and William L. Weidmann, vice president, operations.

FULLY AUTOMATIC, DOUBLE END CASING / STOP / JAMB SAW

by RUVO

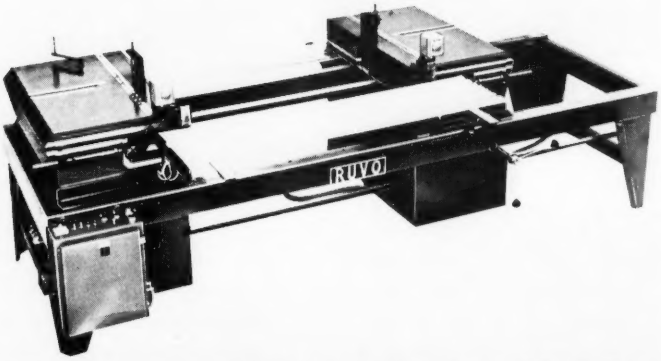

This is the ultimate in efficiency and flexibility! Miters and kerfs casing, sizes and miters stops, cuts and dados jambs. All casings to 3½" wide including pre-finished, vinyl and brick mold undercut. Hopper feed for up to 33 pieces per minute. Automatic change for left or right hand casings. Rapid changeovers.

RUVO AUTOMATION CORPORATION • 8080 ULMERTON ROAD • LARGO, FLORIDA 33541 • (813) 536-5902

Circle Number 16 on Reader Service Card